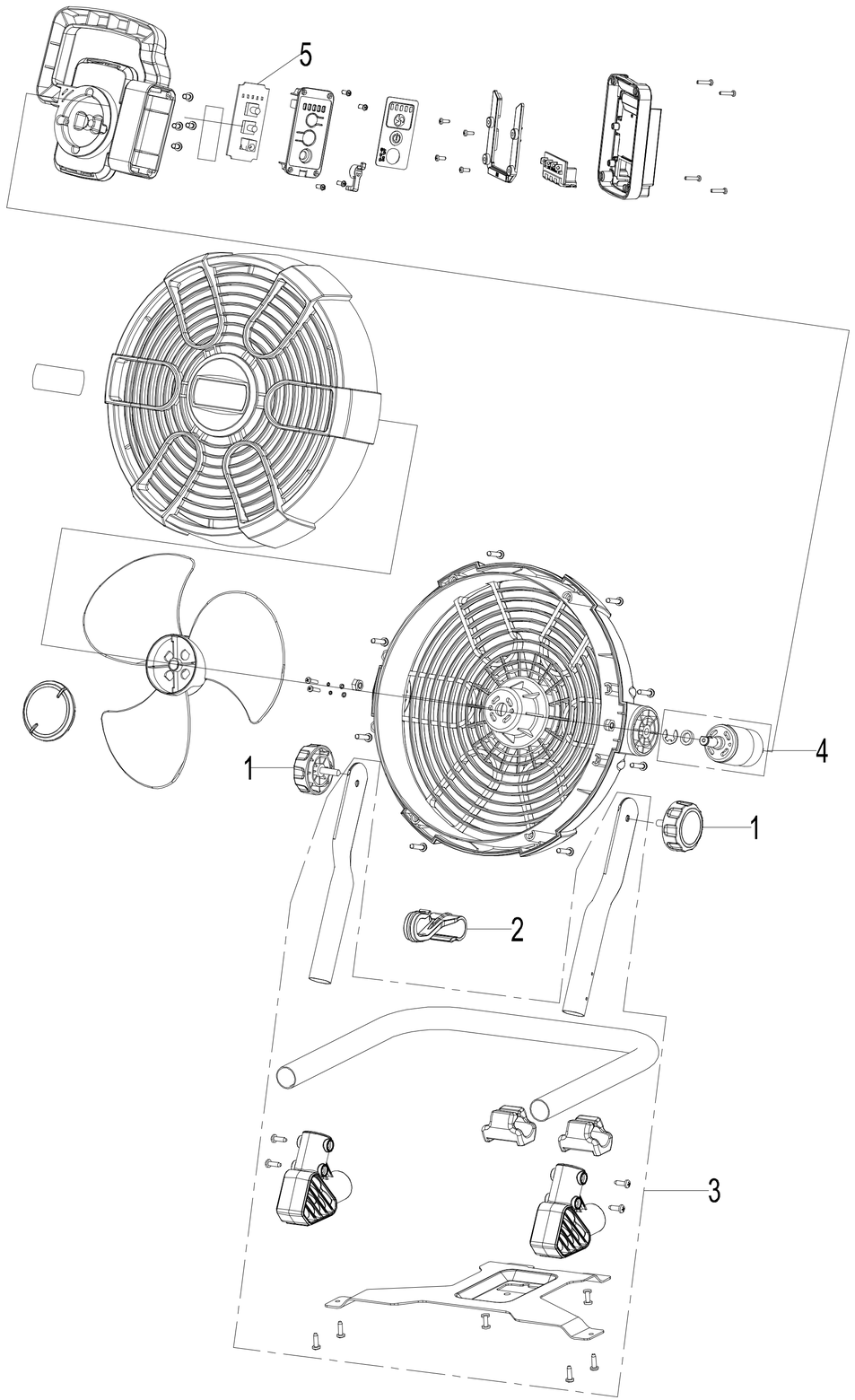

3503407RU-Exploded view	
ERP NO.	3503407RU
MODEL CODE	
DESCRIPTION	24V Fan